Aspera Aspirations

A NEWSLETTER FOR ASPERA-3 · NO 1 · 2000

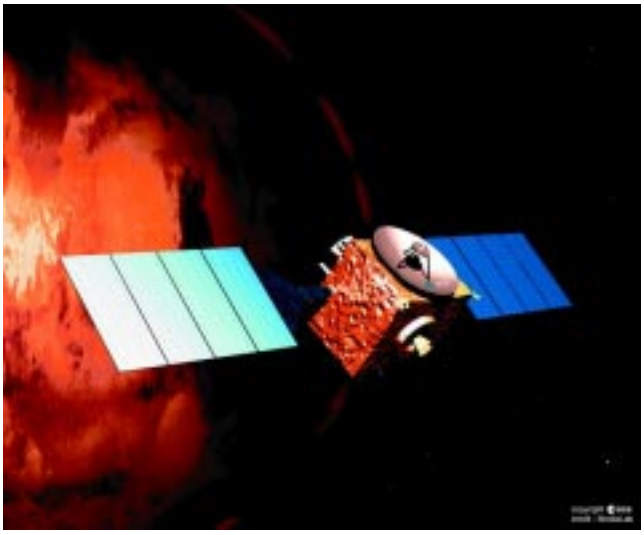

Mars Express is planned for launch in 2003 and will search for water and life on Mars.
ESA PICTURE

The mission to Mars

The latest NASA missions to Mars have encountered problems and hope is now set on ESA's Mars Express. Mars may be our last hope for finding life, or at least evidence of past life, in our solar system. Learning about Mars could lead to better understanding of our own planet, and mark the opening of a new era for Europe in planetary exploration.

Mars Express is planned to be launched to Mars in June 2003 with a Russian Soyuz/Fregat launcher. The experiences gained from this mission, which is seen as a pilot project concerning new methods, will provide a basis for future ESA (European Space Agency) missions. Mars Express is a combination of a 555 kg orbiter and a 60 kg lander, Beagle 2. The scientific objectives include searching for extra terrestrial life and subsurface water and also producing very high-resolution maps of the surface and the atmospheric composition. The interaction between the Martian subsurface, the atmosphere and the interplanetary medium will also be a target of interest. It was in November 1998 that ESA approved the mission concept for Mars Express. All 14 member nations of ESA's Science Program Committee approved the plans, contingent on funding being available for the mission. The cost for the project is estimated at 150 million Euro (US$ 175 million), making this mission the least expensive of all Mars missions planned. Mars Express will carry seven scientific instruments, some of them related to European instruments lost on the Russian Mars 96 satellite. These will include a high-resolution camera and a ground-penetrating radar which will give scientists their first opportunity to search for ground water or ice hidden beneath the Martian surface. The lander will search for evidence of past life by studying soil and rocks. The orbiter will also carry a lander communication package to support the Mars lander mission from 2003 to 2007.

Search for water

In your hand you are holding the first issue of Aspera Aspirations – a newsletter that will keep you informed about the latest news and events concerning Aspera-3 and Mars Express.

Sometime about 3.5 billion years ago, the Martian climate changed rapidly and the water disappeared; something happened within a 100 million years that changed Mars from being a warm and wet planet into a cold, dry one. The atmospheric pressure and temperature decreased very quickly. We still have no answer as to why that happened. The observations from Mars Express may help us to answer what we all want to know; Where did all the water go?

NINA VON KRUSENSTIERNA, Editor

Aspera Aspirations
IRF, Box 812,S-981 28 Kiruna,
Phone:+46 980 79000, Fax: +46 980 79050, E-mail: stas@irf.se

The red planet

Mars is the fourth planet from the sun and the seventh largest in the solar system. Mars is more Earth-like than the other terrestrial planets and by studying it, we can learn a lot about our own planet. We sometimes refer to Mars as the red planet. The reddish look is explained by its rusty surface. It is a relatively cold planet, the average temperature being -55 ° C. The temperature is highest at the equator and reaches its maximum at the stage when Mars is closest to the sun. The weather on Mars is dominated by dramatic changes. Temperatures can drop 40 degrees in a couple of days. The changes in climate are driven by three important factors: Mars' thin atmosphere, its elliptical orbit around the sun, and strong climatic interactions between dust and water ice clouds in the atmosphere. At the time when Mars is closest to the sun, tremendous dust storms rage across the planet. The winds can sometimes reach velocities of 40 m/s. Recent observations from the Hubble Space Telescope indicate that the climate that has been observed is not typical. The climate of Mars now seems to be both colder and dryer compared to when the first measurements were made.

The atmosphere is composed mostly of carbon dioxide, CO_2. There are also traces of argon, nitrogen, oxygen and water. The present atmosphere is approximately 100 times thinner than that of earth. The average pressure on the surface is only about 7 millibars (less than 1% of Earth's), but it varies greatly with altitude from almost 14 millibars in the deepest basins to about 0.3 millibars at the top of Olympus Mons. The pressure changes annually as a result of the formation of the polar caps. Due to the thin atmosphere and the lack of oceans to store heat from the sun, the planet's temperature responds more quickly and intensely to surface changes and atmospheric heating by the sun.

The Martian seasons are similar to those of Earth because of the tilt of the rotational axis of 25°. The seasons of Mars are also affected by the orbit's eccentricity. During summer in the southern hemisphere, when Mars is closest to the sun, the planet receives 40 percent more sunlight than when Mars is in aphelion, farthest from the sun. This annual variation in sunlight causes 35-degree temperature increases during southern summer, creating global dust storms at the planet's surface. The amount of energy and heat received from the sun is half of that which the earth receives.

In its early history, Mars was more like Earth. As happened with Earth, almost all of the CO_2 was used up to form carbonate rocks. The movements of the tectonic plates on Earth caused the carbonate to be recycled back into the atmosphere but that was not possible on Mars as the planet lacks plate tectonics. This meant that the planet lacked a strong (natural) green-house effect and so the Martian surface is much colder than the Earth would be at that distance from the sun. The present amount of CO_2 is too little to produce a notable green-house effect.

Facts about Mars

Orbit	1.52 AU from sun
Diameter	6 794 km
Mass	$0.62 \cdot 10^{24}$ kg
Surface gravity	3.69 m/s^2 (earth 9,78)
Escape velocity	5 km/s (earth11 km/s)
Rotation period	1.026 earth days
Revolution period	686.98 earth days
Tilt of axis	24°
Orbit eccentricity	0.93 (circular = 1)
Max surface temperature	+40° C
Min surface temperature	-120° C

Aspera-3 and the search for water

The third Aspera

Aspera-3 stands for Analyzer of Space Plasmas and Energetic Atoms. It is already our third Aspera! Aspera on board the Russian Phobos mission did an excellent job. Aspera-C on board the Russian Mars-96 mission however has never been heard of since it lies at the bottom of the Pacific Ocean together with the ill-fated spacecraft. Aspera-3 is our hope to visit the amazing red planet again to try to put a new piece in the puzzle called “Martian water”.

Mars and the solar wind

The “empty” space around planets is not empty. It is filled with charged particles streaming away from the Sun. The flow of these particles is also known under the poetical name of the solar wind. The density of the flow is very low, just a few particles per cubic centimeter, but the velocity is huge, approximately five hundred kilometers a second. Since the particles are charged and the charged particle motion produces currents which, in turn, generate magnetic fields, the interplanetary space is also filled by magnetic fields.

Now imagine a planet with its gaseous envelope, or atmosphere, put in the solar wind flow. If nothing protects the planet, the atmosphere will be exposed to this flow and the neutral gases will begin to interact directly with the interplanetary medium. The gases in the upper atmosphere are ionized, i.e., their atoms and molecules are missing one or two electrons that makes them charged. The planet’s particles can find themselves in the flow of interplanetary particles and fields, which can pick them up and take them away. One can say that the solar wind blows away the upper atmosphere.

This process is slow but working over billions of years it can finally result in very significant losses of the atmospheric gases. This is exactly what is happening on Mars. On the Earth we have a better luck since our planet has its own magnetic field. When the interplanetary particles begin to “feel” the earth’s magnetic field they bend their trajectories and the flow deviate away from the planet. The magnetic field reliably protects our atmosphere from the influence of the solar wind.

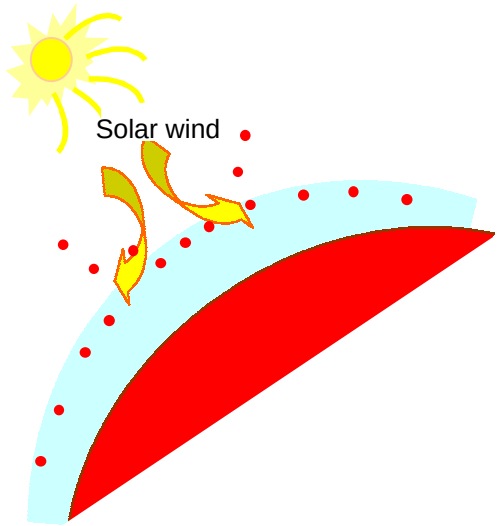

The gases in the upper atmosphere of Mars are taken away by the solar wind flow.

What we want to study

With the Aspera-3 experiment we want to study the process of the interaction between the solar wind and the Martian atmosphere. We want to find the answer to the question: How strongly do the interplanetary plasma and electromagnetic fields affect the Martian atmosphere? This question is directly related to the problem of where the Martian water has gone.

As the water on the surface evaporates, the vapor reaches the upper atmosphere and the water molecules can, under the solar radiation, break apart forming molecules of hydrogen and oxygen. The atoms, in turn, can be ionized, and eventually be picked-up by the solar wind. It is not clear how effective this process is. We want to find this out and to determine the fate of the Martian water. Is it lost to space or frozen and buried? If it is the former, what could produce such an effective escape mechanism? Since liquid water is a fundamental requirement for life, a clear understanding of the fate of the Martian water is a crucial issue in resolving the problem as to whether or not life existed on Mars in the past.

Aspera-3 – isn't she beautiful?

In order to understand how the solar wind interacts with the upper atmosphere we want to measure all kinds of charged particles, which exist in the region where the solar wind comes into the contact with the Martian atmosphere. These particles are ions and electrons. Since we want to distinguish the particles coming from the Sun and from those coming from the planet we want to separate ions according to their mass. The solar wind consists mostly of protons (mass 1 in atomic mass units) while the planetary ions are mostly oxygen (mass 16). In order to do these measurements the Aspera-3 experiment will include a unit called an Ion Mass Analyzer (IMA) which will measure ion fluxes from, essentially, all directions and in the energy range from a few electron volts up to 40,000 electron volts. To separate the ions in mass we use magnets, a technique used in many laboratory mass spectrometers. IMA is a replica of the instrument to be flown to a comet on another European Space Agency mission - Rosetta. An instrument called the Electron Spectrometer (ELS) will make measurements of the electron fluxes in the energy range from a few electron volts up to 20,000 electron volts. This is, perhaps, the smallest electron spectrometer ever built.

Ion Mass Analyzer, IMA

Measuring the ions and electrons we can get an idea about what is going on at one particular point in the orbit, the point where the spacecraft is located at this moment. We do not know what is happening at the same time in other parts of the spacecraft orbit or in other regions of the planet. However, if we want to calculate how much planetary material in total is been evacuated from Mars we need to have simultaneous data from everywhere, an impossible task. Therefore, what is left is to guess and extrapolate. Fortunately, the plasma behaviour obeys certain laws, which we know, and we can predict the distribution of the fluxes around planet quite well having measurements from only a few points along the spacecraft orbit. Or, we can wait for a year to collect as much data as possible from all regions and then, statistically, average them. In both cases, our knowledge will not be complete. There is, however, the third way.

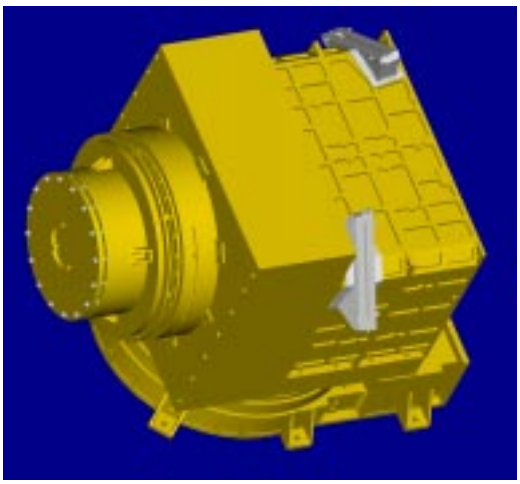

Main unit, MU

Any ion immersed in the neutral background gas can pick-up an electron from a neutral molecule/atom and be converted into an atom again. Since the parent ion is usually very fast (energetic), the produced atom will also be very fast. This atom is therefore called an Energetic Neutral Atom or, an ENA. The ENAs are not affected by electromagnetic fields and can therefore propagate in a straight line like photons. One can say that any plasma immersed in the background neutral gas will "shine" in ENAs. Thus, a detector, which can measure ENAs from all directions, can produce an image of the plasma. Since we can take an ENA image essentially instantaneously, we can visualize the plasma and learn about how it is distributed globally in space at this particular moment. This technique is called Energetic Neutral Atom Imaging (ENA imaging) and is now actively being developed.

Aspera-3 includes two units to measure energetic neutral atoms. The one called Neutral Particle Imager (NPI) can obtain ENA images with good angular resolution (small pixels) but cannot resolve the ENA energy and mass. The second unit, the Neutral Particle Detector (NPD), can resolve the ENA energy and mass but its pixels are rather crude. NPD will measure ENAs in the most interesting energy range between 100 electron volts and 10,000 electron volts. Combining data from NPI and NPD, we will obtain the full information about global distribution of plasma around Mars.

The Mars Express spacecraft is fixed in space with one of its surfaces pointing towards the planet. That means, if we want to point our sensors to all possible directions in space we have to rotate them. That is the reason why we put ELS, NPI, and NPD on the scanner. In order to control all sensors, the scanner, communication with the spacecraft and to accumulate the data in the right

format, Aspera-3 has two computers or digital processing units (DPU). One is for IMA and the second for the rest of the instrument.

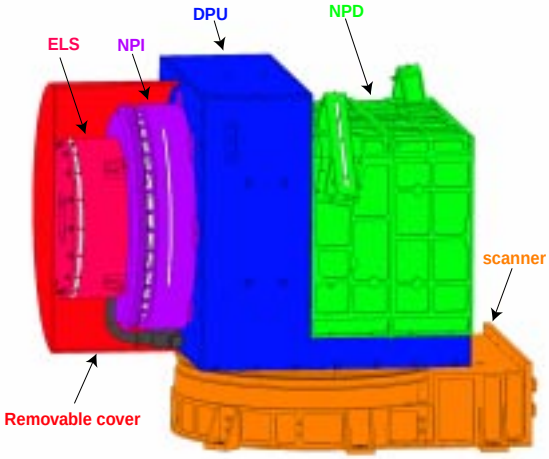

The different instruments will measure different particles and study their characteristics.

The computers are built around the modern Swedish processor THOR developed by Saab Ericsson Space specifically for space applications. The processor can withstand very high levels of radiation and has a special architecture to increase reliability. The computer for the Swedish satellite Odin utilizes an earlier version of this processor.

We are unique

The Aspera-3 experiment is unique in many respects. It will make the first ever ENA measurements at another planet. The Neutral Particle Detector will use a completely new technique to measure ENAs. It has never been used before in space. No instrumentation with similar scientific objectives has or is planned to be flown to Mars. It will fly on the first ESA mission to Mars and on the first flexible mission. The instrument is being built by a large international team including 15 groups from 10 countries (see our logo) from both Europe and the USA. The team includes 27 scientists and more than 50 engineers and programmers, who will support the efforts during different phases of the project.

Where we are now

We are doing well in that all groups have received adequate funding. We are manufacturing the first hardware, electrical model of the instrument, to be delivered to Matra Marconi Space, Touluse, France – a company, which builds the spacecraft. We have finished laboratory development of the Neutral Particle Detector, completed its mechanical design and are ready to begin building the NPD technological model. Now we have all sensor designed. We are working hard to build a technological model of the scanner in order to start testing it. We have a challenging task ahead; the scanner must operate smoothly for two years at Mars! We have started to write the first software, which will control the instrument. On February 22-23, the Aspera-3 team gathered in Kiruna for its fifth project meeting to discuss the general status of the experiment and instrument. The particular attention was given to finalizing the NPD design and scientific operations at Mars.

Aspera-3 facts

Particles to measure	Ions, electrons, ENAs
Amount of units	2
Amount of sensors	4
Mass	8.2 kg
Power	15 W
Size	36 x 40 x 230 cm (Main Unit) 26 x 15 x 15 cm (IMA)
Data to produce	60 Mbytes / day

Aspera-3 team

The Aspera-3 team is so big that we can not present all members at once in one issue. We start with the groups, which are heavily involved in the hardware development and, of course, the list to be continued! We are a great team, which can do everything – build space instruments, repair Jaguar cars, fly aircrafts, sail and what ever else is needed for space exploration!

Swedish Institute of Space Physics (IRF), Kiruna, Sweden

Rickard Lundin is the Aspera-3 Principal Investigator.

Stas Barabash assumes the overall responsibilities for coordinating the Aspera-3 development as well as being responsible for providing the NPD and NPI sensors. It is his one and half year old daughter and wife who support him in coming through all this.

Joakim Gimholt is the Aspera-3 Experiment manager, a person who makes possible all crazy ideas scientists have.

Olle Norberg is responsible for providing the Ion Mass Analyzer and one of the ELS key persons. Olle is a man whose advice on all aspects of the instrument is very much appreciated. He is married and has a ten-month old son.

Herman Andersson is a manager for the scanning platform development. He will ensure that everything will rotate. One of his spare time activities is collecting and restoring Jaguar cars.

Yamauchi Masatoshi is a great expert to look at the data. Beside that, he helps us to coordinate Aspera-3 with the Japanese Martian mission, Nozomi. He is a skier, runner and a writer.

University of Bern, Switzerland

Peter Wurz and Peter Bochsler are participating in the definition, design, and construction of the NPD sensor. In particular they help with the surface science questions concerning start and stop surfaces.

University of Arizona, Tucson ,USA

Charles Curtis is helping the Neutral Particle Detector (NPD) team develop a light-absorbing plate needed for the NPD to function well in bright sunlight. He will work with Bill Sandel and Johnny Hsieh to perform some tests on the instrument at the University of Arizona. For fun, he likes to cycle and to fly a small plane.

Southwest Research Institute, San Antonio, USA

SwRI will be providing the complete Electron Spectrometer (ELS), the imaging sensor for the Ion Mass Analyzer (IMA), and the ground software. In addition SwRI will participate in the scientific analysis. A voice from Texas: “We at SwRI are happy to be the “token” Americans on Aspera and will, as Texans, entertain the idea of Sweden joining the Lone Star State!”

Space Research Institute, Moscow, Russia

The Russian team consists of Andreij Fedorov, Elena Budnik and Alexander Grigorijev. They are involved in designing and developing the NPD sensor. They perform computer simulations as well as evaluation of the instrument prototypes – both technological and flight models. Elena and Andreij spend many weekends on their sailboat.

Instituto di Fisica dello Spazio Interplanetario (IFSI), Italy

Stefano Orsini leads the Italian Aspera-3 group. Among the group members, Riccardo Cerulli-Irelli is the wizard of the Ground Support Equipment of the whole project; Maurizio Maggi makes a lot of electronics components working together as a single unit for the NPD sensor; Afredo Morbidini is the mechanics manufacturer of the NPI sensor; Anna Milillo is already carefully evaluating the scientific potential of the future measurements.The whole group is actually running for delivering hardware and software.Moreover, Riccardo runs with his skies down from the Apennines, Maurizio runs in the air with the waves as a radio-amateur, Stefano's and Anna's voices run with the melodies of the choir club of the 'Tor Vergata Research Area'.

Finnish Meteorological Institute, Finland

Pekka Riihelä is an electronic engineer who will design to implement commands to the computer of the instrument, that is, how to give thoughts to the brains. Tuukka Säles is the person who will finally put the commands to the on board computer, so the spirit to the instrument. Esa Kallio makes simulations which help to understand what is going on around Mars. Finally everybody in the group appreciates an advise from Hannu Koskinen, a professor who has done Mars research since 80's.

Credits

The motto is a re-phrasing of the motto of Sir William Herschel (1738-1822) “Whatever shines should be observed”. Thanks to Prof. Susan McKenna-Lawlor (STIL) for the idea.

Read more about Mars Express on: http://sci.esa.int/marsexpress/

OUR MOTTO:

Whatever a planet shines in

should be observed!